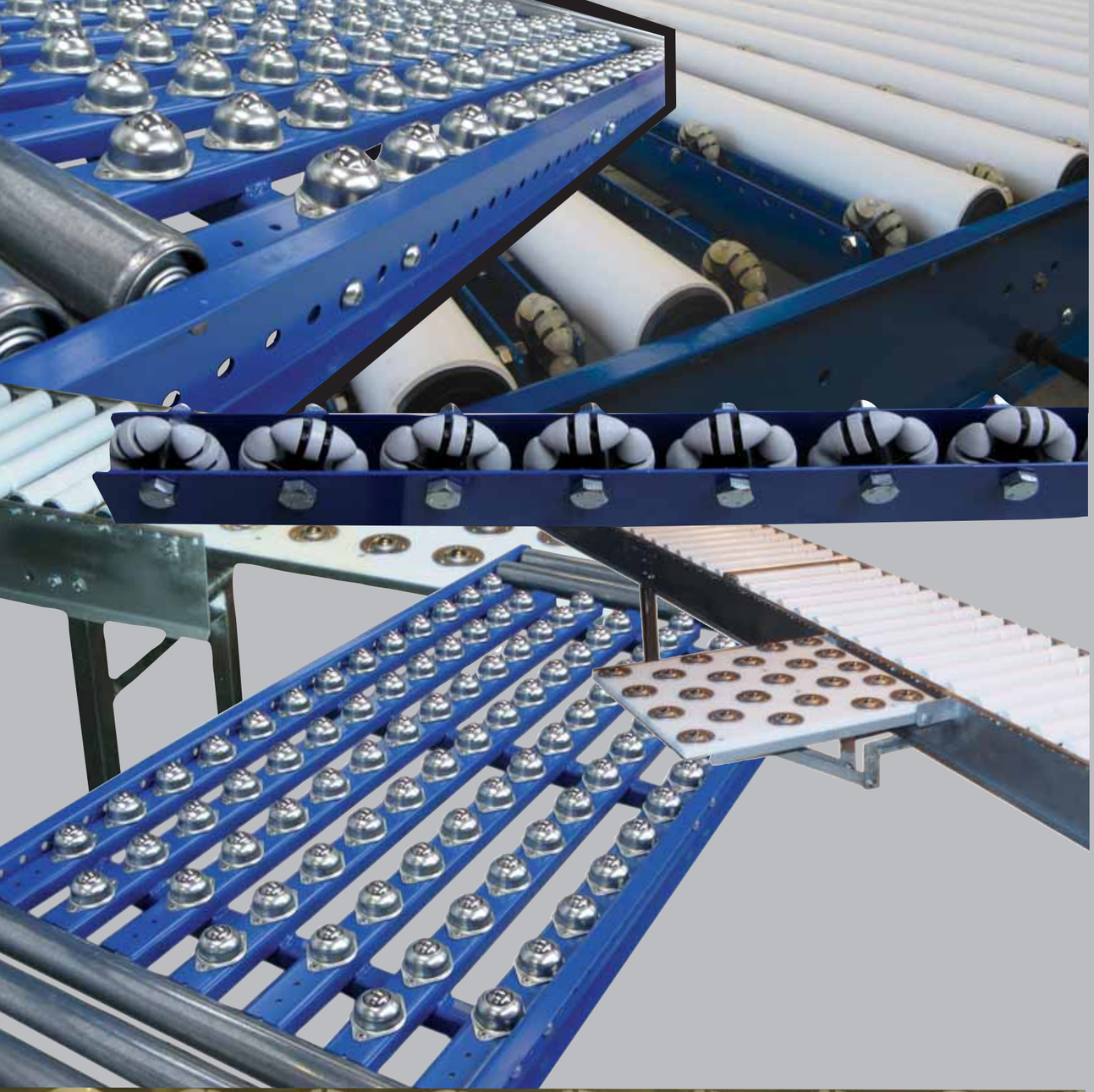

MULTIROLL

Ball Transfers & Multi Directional Wheels

DYNO NZ
0800 144 044

Craigs 113309

MTRs

MTR 50 — Multi Directional Roller

- Load capacity 5kg each.
- Black acetal core.
- Grey acetal rollers.
- S/S axles.
- Connecting piece to make double rollers (recommended).

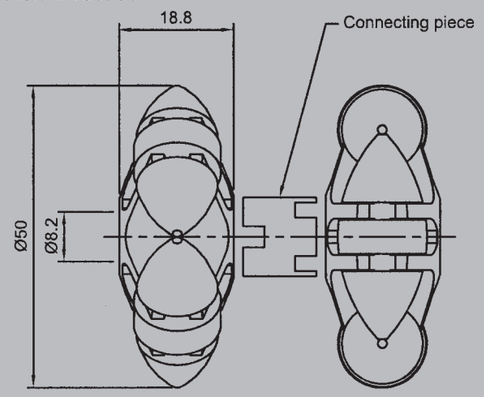

MTR 80 — Multi Directional Roller

- Load capacity 20kg each.
- Black acetal core.
- Grey acetal rollers.
- S/S axles.
- Connecting piece to make double rollers (recommended).

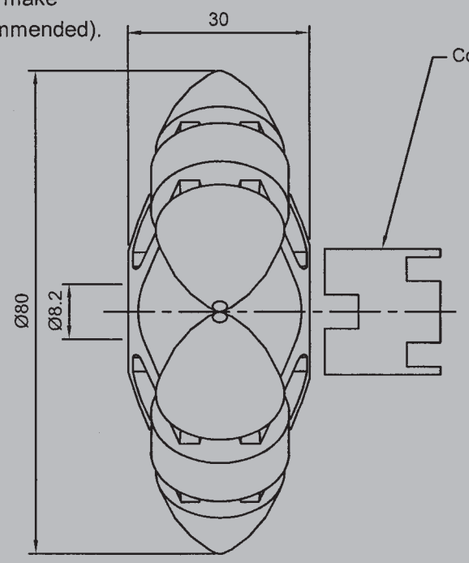

Ball Transfers

BT253-B

- Load capacity 50Kg
- Zinc plated pressing
- Hardened balls

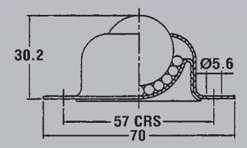

BT253-P

- Load capacity 50Kg
- Zinc plated pressing
- Hardened balls

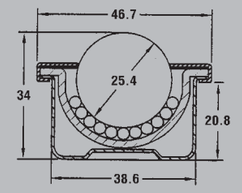

BT253-MT

- Load capacity 50Kg
- Zinc plated pressing
- Hardened balls

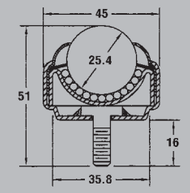

BT253SS-F

- Load capacity 60Kg
- S/S pressing & balls

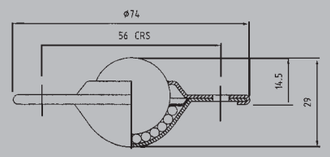

BT253-F

- Load capacity 60Kg
- Zinc plated pressing
- Hardened balls

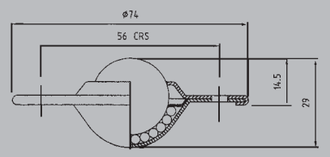

BT323-B

- Load capacity 150Kg
- Zinc plated pressing
- Hardened balls

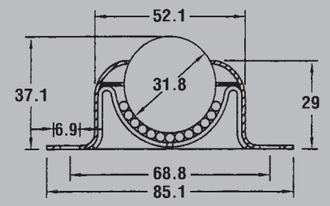

BT303-P

- Load capacity 100Kg
- Zinc plated pressing
- Hardened balls

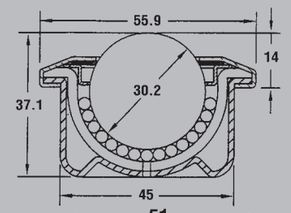

BT304-P

- Load capacity 180Kg
- Zinc plated housing
- Stainless steel balls

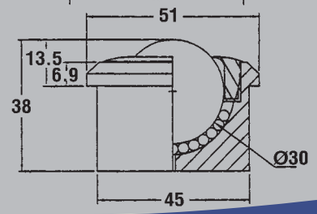

Other sizes & styles available on indent orders